PRODUCT SHEET

Description:
Glass Door Hinge "Square" Centre, R, Alu, F/Narrow Frames,W/ Short Mounting Plate, F/Inset Doors, Thickness 4-6mm,1 Zamak, Screw W/PVC Tip & 1 Zamak Screw W/Hard ø5x3,5mm Extension,, Catch Made Of ABS Plastic

Item number:
15.06.236-0

Units	Box	Carton	HS Code	Barcode
Pcs.	10	100	8302100090	5704866054836

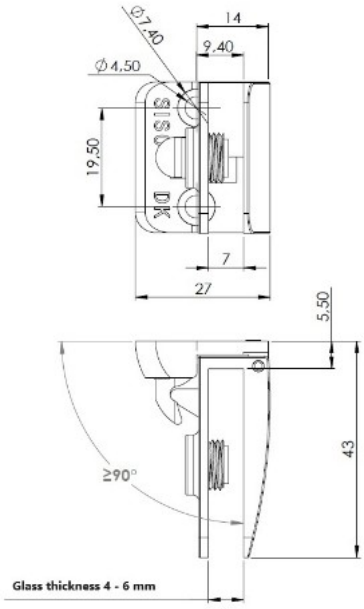

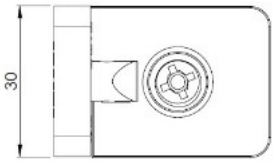

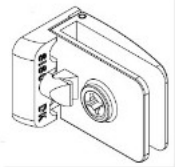

SISO A/S
Mileparken 11
DK-2740 Skovlunde
Denmark
VAT: 24786013

Phone +45 45 830 900

www.siso.dk
siso@siso.dk

Danske Bank
Nytorv Branch
Copenhagen
SWIFT: DABADKKK

Account no.
4180 3112 112936
IBAN Account
DK7230003112112936